RTA

Round Tapered Aluminum Pole with Arms
Single Cross Arm — Direct Buried

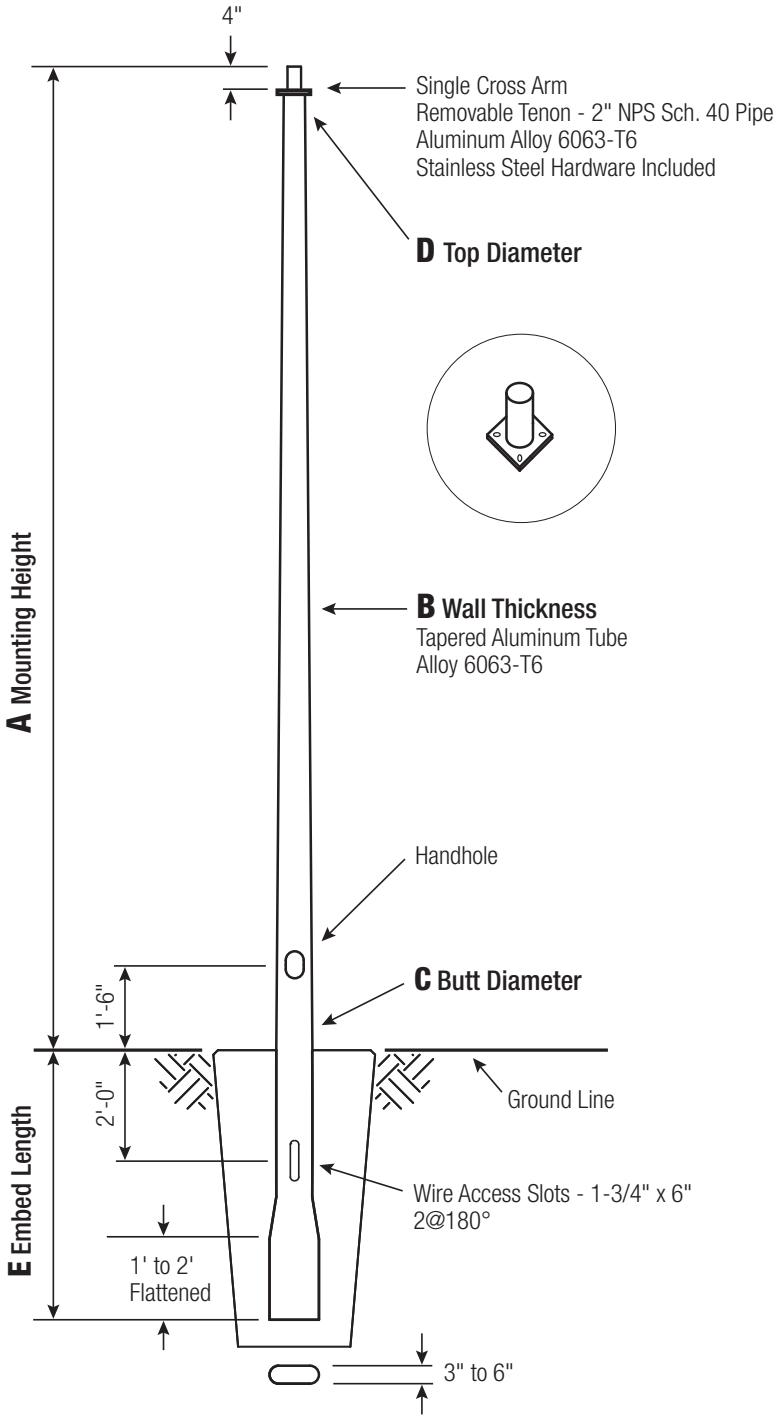

Satin Aluminum or Powder Coated Finish per Customer Specification.

C Butt Dia.	D Top Dia.	E Embed
6	4.5	4'
7	4.5	5'
8	4.5	5'
10	6	6'

C and D Dimensions in Inches

Pole

Shaft and arm will be constructed of seamless extruded tube of 6063 Aluminum Alloy per the requirements of ASTM B221. The shaft assembly shall be full-length heat treated to produce a T6 temper.

Handhole

6" Butt Diameter - *Reinforced, 3" x 5" curved Cast Aluminum Frame (Alloy 356-T6) with Aluminum Door and two (2) SS Hex Head Screws. A Grounding Provision incorporating a 3/8" diameter hole is provided opposite the Handhole.*

7"+ Butt Diameters - *Reinforced, 4" x 6" curved Cast Aluminum Frame (Alloy 356-T6) with Aluminum Door and two (2) SS Hex Head Screws. Reinforced Frame will contain a tapped 3/8"-16NC Grounding Provision.*

Embed Detail

Direct Buried Pole bottom section on 6"+ butt diameter poles will be partially flattened into an anti-rotational, oval cross section. Wire access will be provided 24" below ground line. Soil conditions vary by site. Foundation requirements should be determined by a qualified Structural Engineer with knowledge of jobsite soil conditions.

Vibration Damper

When determined necessary by Hapco, a Vibration Damper will be factory-installed inside the pole shaft. Customer specification of the damper is available.

WARNING: *Do not install light pole without luminaire.*

A Mtg. Hgt.	B Wall Thickness	C Butt Diameter	Lum. Weight	Maximum EPA 90	100	110	120	130	Catalog Number
20	0.156''	6	100	15.2	11.6	10.8	8.8	7.2	RTA20C6BEF10-**
20	0.188''	6	100	18.8	14.6	13.4	11.0	9.2	RTA20D6BEF10-**
20	0.156''	7	100	22.6	17.8	16.4	13.4	11.4	RTA20C7BEF10-**
20	0.188''	7	100	27.8	22.0	20.4	16.8	14.2	RTA20D7BEF10-**
20	0.188''	8	100	38.2	30.4	28.2	23.4	19.8	RTA20D8BEF10-**
25	0.188''	6	100	12.4	9.2	8.4	6.8	5.4	RTA25D6BEF10-**
25	0.156''	7	100	15.2	11.6	10.6	8.6	7.0	RTA25C7BEF10-**
25	0.188''	7	100	19.4	14.8	13.6	11.2	9.2	RTA25D7BEF10-**
25	0.156''	8	100	22.0	17.0	15.8	12.8	10.8	RTA25C8BEF10-**
25	0.188''	8	100	27.2	21.4	19.8	16.2	13.6	RTA25D8BEF10-**
25	0.219''	8	100	32.2	25.4	23.6	19.4	16.4	RTA25E8BEF10-**
25	0.250''	8	100	37.0	29.4	27.2	22.6	19.0	RTA25F8BEF10-**
30	0.188''	7	100	13.4	10.0	9.0	7.2	5.8	RTA30D7BEF10-**
30	0.156''	8	100	15.4	11.6	10.6	8.6	7.0	RTA30C8BEF10-**
30	0.188''	8	100	19.8	15.2	14.0	11.2	9.4	RTA30D8BEF10-**
30	0.219''	8	100	23.8	18.4	17.0	13.8	11.6	RTA30E8BEF10-**
30	0.250''	8	100	27.6	21.6	20.0	16.4	13.6	RTA30F8BEF10-**
30	0.188''	10	100	35.4	28.0	26.2	21.6	18.2	RTA30D1CEF10-**
30	0.219''	10	100	41.8	33.4	31.2	25.8	21.8	RTA30E1CEF10-**
30	0.250''	10	100	48.2	38.6	36.0	30.0	25.2	RTA30F1CEF10-**
35	0.188''	8	100	14.2	10.4	9.6	7.6	6.0	RTA35D8BEF10-**
35	0.219''	8	100	17.4	13.2	12.0	9.6	8.0	RTA35E8BEF10-**
35	0.250''	8	100	20.8	15.8	14.6	11.8	9.6	RTA35F8BEF10-**
35	0.188''	10	100	27.0	21.4	19.8	16.4	13.6	RTA35D1CEF10-**
35	0.219''	10	100	32.4	25.8	24.0	19.8	16.6	RTA35E1CEF10-**
35	0.250''	10	100	37.6	30.2	28.0	23.2	19.4	RTA35F1CEF10-**
40	0.188''	8	70	10.0	7.0	6.2	4.6	3.6	RTA40D8BEF10-**
40	0.219''	8	100	12.6	9.0	8.2	6.2	5.0	RTA40E8BEF10-**
40	0.250''	8	100	15.2	11.2	10.2	8.0	6.6	RTA40F8BEF10-**
40	0.188''	10	100	20.6	16.2	15.0	12.2	10.0	RTA40D1CEF10-**
40	0.219''	10	100	25.2	20.0	18.6	15.2	12.6	RTA40E1CEF10-**
40	0.250''	10	100	29.8	23.6	22.0	18.0	15.0	RTA40F1CEF10-**
40	0.312''	10	100	38.6	30.8	28.6	23.6	19.8	RTA40G1CEF10-**

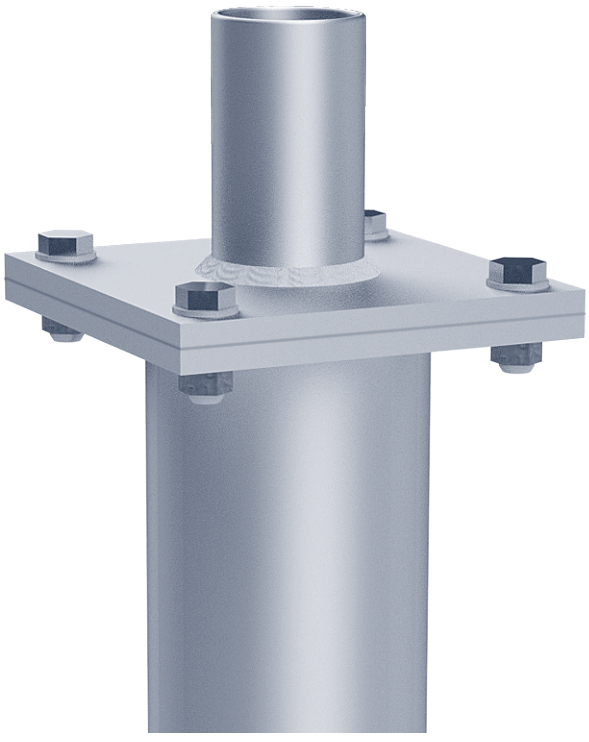

Catalog Number System

The catalog number for Hapco poles utilizes the following identification system.

	MOUNTING HEIGHT		BUTT DIA.	BASE STYLE	ARM QUANT.		FINISH
RTA				E	F	1	0 -
	WALL THICK.		TOP DIA.	ARM STYLE	ARM LTH.		

Catalog Number Example -

RTA 30 D 8 B E F 1 0 – 01

Round Tapered Aluminum, 30' Mounting Height, .188" Wall Thickness, 8" Butt Diameter, 4.5" Top Diameter, Direct Buried, Cross Arm, Single, No Arm Length, Satin Aluminum Finish.

Wall Thickness
C = .156"
D = .188"
E = .219"
F = .250"
G = .312"

Butt Diameter
6 = 6"
7 = 7"
8 = 8"
1 = 10"

Top Diameter
B = 4.5"
C = 6"

Base Style
E = Direct Buried

Arm Style
F = Cross Arm

Arm Quantity
1 = Single

Arm Length
0 = Standard Removable Tenon

Finish
01 = Satin Aluminum
BA = Black Powder Coat
BH = White Powder Coat
BM = Dark Bronze Powder Coat
BV = Dark Green Powder Coat
GC = Gray Powder Coat
** = Specify Finish

EPA Notes:

Effective Projected Area (EPA) in square feet. EPA's calculated using wind velocity (mph) indicated in accordance with 2009 AASHTO LTS-5 using a 25 year design life. Maximum EPA is based on the luminaire weight shown. Increased luminaire weight may reduce the maximum EPA. If weight is exceeded, or if other design life or code is required, please consult the factory.