RTA

Round Tapered Aluminum Pole with Arms
Triple Bullhorn 120° — Direct Buried

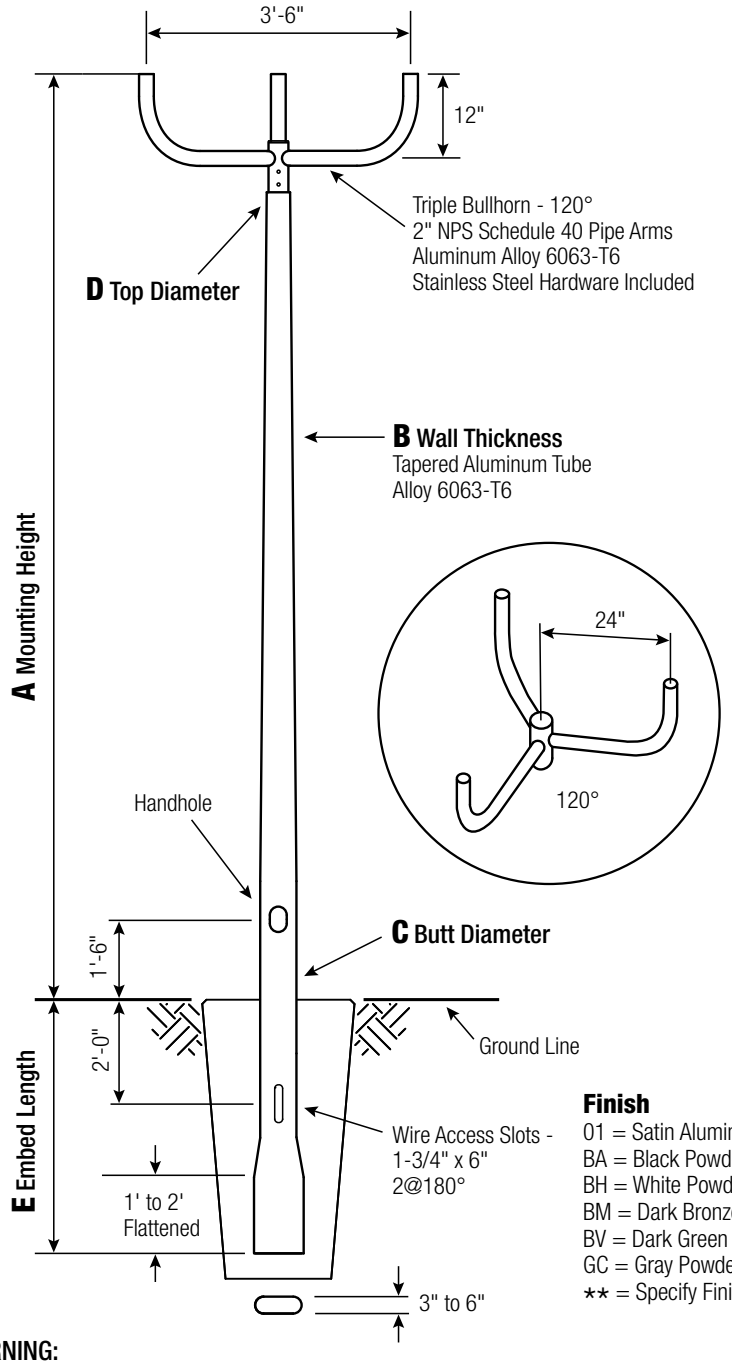

Finish
01 = Satin Aluminum
BA = Black Powder Coat
BH = White Powder Coat
BM = Dark Bronze Powder Coat
BV = Dark Green Powder Coat
GC = Gray Powder Coat
** = Specify Finish

WARNING:
Do not install light pole without luminaire.

Satin Aluminum or Powder Coated Finish per Customer Specification.

A Mtg. Hgt.	B Wall Thickness	C Butt Diameter	Lum. Weight	Maximum EPA 90	100	110	120	130	Catalog Number
25	0.250"	8	80	10.2	7.8	7.0	5.6	4.4	RTA25F8BEBC0-**

C Butt Dia.	D Top Dia.	E Embed
8	4.5	5'

C and D Dimensions in Inches

Customer Name:		
Project:	Location:	
Notes:		Quantity:

RTA25F8BEBC0 - [ ]
CATALOG NUMBER — FINISH

Pole
The pole shaft will be constructed of seamless extruded tube of 6063 Aluminum Alloy per the requirements of ASTM B221. The shaft assembly shall be full-length heat treated to produce a T6 temper.

Handhole
Reinforced, 4" x 6" curved Cast Aluminum Frame (Alloy 356-T6) with Aluminum Door and two (2) SS Hex Head Screws. Reinforced Frame will contain a tapped 3/8"-16NC Grounding Provision.

Embed Detail
Direct Buried Pole bottom section on 6"+ butt diameter poles will be partially flattened into an anti-rotational, oval cross section. Wire access will be provided 24" below ground line. Soil conditions vary by site. Foundation requirements should be determined by a qualified Structural Engineer with knowledge of jobsite soil conditions.

Vibration Damper
When determined necessary by Hapco, a Vibration Damper will be factory-installed inside the pole shaft. Customer specification of the damper is available.

EPA Notes: *Effective Projected Area (EPA) in square feet. EPA's calculated using wind velocity (mph) indicated in accordance with 2009 AASHTO LTS-5 using a 25 year design life. Maximum EPA is based on the luminaire weight shown. Increased luminaire weight may reduce the maximum EPA. If weight is exceeded, or if other design life or code is required, please consult the factory.*

hapco pole products
26252 Hillman Highway
Abingdon, VA 24210
800.368.7171
www.hapco.com